# INFLUENCE OF CERTAIN REACTION PARAMETERS ON METHANATION OF COAL GAS TO SNG

K.-H. Eisenlohr[+] F. W. Moeller[+] and M. Dry[++]

[+] Lurgi Mineraloeltechnik GmbH., Frankfurt/M., Germany

[++] South African Coal, Oil and Gas Corporation, Sasolburg, South Africa

## INTRODUCTION

Converting coal to a gas which has the same characteristics as natural pipeline quality gas and which is known as substitute natural gas (SNG) is one of the promising possibilities to overcome the increasing energy demand in the United States.

Lurgi pressure gasification of coal and treating and purifying processes for the product gas used in 14 commercial plants are planned to be the basis of a process route to convert coal into SNG 1) 2) 3).

Four different process steps are required in the Lurgi process (Fig. 1):

Pressure gasification of coal
Shift conversion of crude gas
Gas purification by Rectisol
Methane synthesis.

As the methane syntheses process has not yet been applied commercially , it has been of significant importance to demonstrate the technical feasibility of this process step. Therefore two semicommercial pilot plants have been operated for 1 1/2 years.

One plant, designed and erected by Lurgi and South African Coal, Oil and Gas Corporation (SASOL), Sasolburg, South Africa, was operated as a sidestream plant to a commercial Fischer-Tropsch Synthesis. Synthesis gas is produced in a commercial coal pressure gasification plant which includes Rectisol gas purification and shift conversion. So the overall process scheme for production of SNG from coal could be demonstrated successfully.

The other plant, a joint effort of Lurgi and El Paso Natural Gas Corporation, was operated at the same time at Petrochemie, Schwechat, near Vienna, Austria. Starting from synthesis gas produced from naphtha different reaction conditions to those of the SASOL plant have been successfully operated.

The results of two long-term test runs in the SASOL plant in view of the catalyst life under design conditions in a commercial methane synthesis have been published already 3).
This paper deals with further test results of both demonstration unites concerning the influence of certain reaction parameters which are the basis for flexibility and operability of the Lurgi methanation scheme.

## DESIGN OF THE DEMONSTRATION PLANTS

The scheme of a commercial methane synthesis provides a multistage reaction system and hot recycle of product gas. Adiabatic reactors connected with waste heat boilers to remove the heat in form of high pressure steam are used.

In designing the pilot plants major emphasis was placed on the design of the catalytic reactor system. Thermodynamic parameters (compositon of feed gas, temperature, temperature rise, pressure, etc.) as well as hydrodynamic parameters (bed depth, linear velocity, catalyst pellet size etc.) are identical to those of a commercial methanation plant. This permits direct upscaling of test results to commercial size reactors, because radial gratients do not exist in an adiabatic shaft reactor.

Arrangement of the semicommercial pilot plants permitted supervision and operation of the plant from a central control panel. The installed safety control system has been successfully tested during several emergency shut-downs with no effect on reactor material and catalyst.

The scheme of the methanation demonstration units can be seen in Fig. 2.
Synthesis gas, after being heated in heater E-1, is mixed with recycle gas. Zinc oxide reactor D-1 serves as an emergency catch pot for sulfur breakthrough from the purification plant. The total feed is heated in heater E-2 and charged to main methanation reactor D-2 with additional steam. Effluent gas from reactor D-2 is cooled in heat exchanger E-3 and cooler E-4, thereby condensing the steam. Part of the reactor effluent gas is recycled, while the rest is reheated in E-3 and fed to final or polishing methanation reactor D-3. Product gas from D-3 is cooled in E-5.

All tests reported here are performed with a special methanation catalyst G 1-85 developed by BASF, Ludwigshafen, for this process. The catalyst with a relatively high nickel content on a carrier was changed to reactors D-2 and D-3 in unreduced form and had to be activated by reduction with hydrogen.

## INFLUENCE OF SYNTHESIS GAS COMPOSITION

The influence of synthesis gas compostion on conversion, catalyst life, carbon black formation, etc. has been determined in numerous tests. Characteristic parameters for synthesis gas composition are $H_2$/CO ratio, residual $CO_2$ content and content of trace components in form of higher hydrocarbons and catalyst poisons.

### $H_2$/CO Ratio

In a commercial shift conversion plant a change in throughput and conversion has to be taken into account and will affect the $H_2$/CO ratio of the synthesis gas. Therefore the Sasol plant has been operated in three different test runs of more than 1000 hours each with various $H_2$/CO ratios in synthesis gas to see if there is any effect on operability of methane sythesis. $H_2$/CO ratios of 5.8; 3.7 and 2.0 were adjusted by varying the mixing ratio of shifted and unshifted coal gas. The test results obtained at a synthesis pressure of 18 kp/cm$^2$ are summerized in Tab. 1. The expected equilibrium conversion was achieved in all test runs. A remarkable result has been that there is no difference in the axial temperature profile while operating with synthesisgas with a $H_2$/CO ratio of 3.7 or 5.8. Adiabatic endtemperature was reached in both cases in 20% of the catalyst bed depth after 500 operating hours respectively 22% bed depth after 1000 operating hours. Corresponding results have been achieved during a long-term test of 4000 operating hours when the $H_2/CO$ ratio was decreased from 5.8 to 3.8 after 1500 hours and no change in temperature profile and deactivation rate wos measurable. 3)

A deviation from these results was measured while operating with a $H_2/CO$ ratio of 2.0. After 500 hours 23% of the catalyst bed depth are needed to reach adiabatic end temperature. The slower reaction rate might be explained by the higher steam content in reactor feed gas and by the fact that part of the CO has to be converted by the relatively slow shift conversion reaction. The negative value of $CO_2$ conversion shows that $CO_2$ is formed and not consumed.

In all three tests there was no sign of carbon black formation. Pressure drop over the reactor stays constant during the whole operating period and there was no accumulation of free carbon on catalyst. Analysis of discharged catalyst for free carbon showed only 80 - 90% of the carbon added to the catalyst as pelletizing aid.

Finally it can be said that variation in $H_2/CO$ ratio will not affect operability of an SNG plant using a hot recycle system for methanation as demonstrated in the Sasol plant.

## Residual $CO_2$ Content

The feed gas to Rectisol gas purification will contain 29 - 36 Vol% of $CO_2$ depending on the rate of shift conversion. The rate of $CO_2$ to be washed out will be determined by the requirements of methane syntheses and by the need to minimize the cost for Rectisol purification.

For SNG manufacture it is neccessary to reduce the hydrogen to a minimum to achieve a high calorific value. This is best realized if synthesis gas, instead of having a stoichiometric composition, contains a surplus of $CO_2$ which can be utilized to reduce the $H_2$ content to less than 1 percent according to equilibrium conditions by the $CO_2$ methanation reaction. The surplus $CO_2$ has to be removed at the end of the process sequence. It is, of cours, also possible to operate a methanation plant with synthesis gas of stoichiometric composition. In this case there is no need for a final $CO_2$ removal system. The residual $H_2$ content will be higher and therefore the heating value will be lower, which can be seen by comparing the results of two long-term runs in Tab. 2.

The Sasol plant was operated with a surplus of $CO_2$ during a long-term test of 4000 hours. 33.4% of the $CO_2$ in synthesis gas is methanated, while the rest of 66.6% $CO_2$ leoves the reaction system unconverted. Product gas from final methanation yielded specification grade SNG containing a residual hydrogen of 0.7 Vol% and residual CO of less than 0.1 Vol%. The heating value was 973 BTU/SCF after $CO_2$ removal to 0.5 Vol% (calc.).

The Schwechat plant was operated in a long-term test of 5000 hours at the same time with a stoichiometric synthesis gas. The residual hydrogen content could be decreased to 2.2 Vol% resulting in a heating value of 950 BTU/SCF when about 1 Vol% nitrogen is present in synthesis gas.

There was no difference in operability and catalyst behaviour (activity and deactivation) recognizable between the two plants. The expected catalyst life time in a commercial plant, calculated from the movement of the temperature profile down the catalyst bed with time, will be in both cases more than 16000 hours at design conditions.

A significant feature of the operation of the two plants was that only a small deviation in feed gas composition is tolerable when using a stoichiometric synthesis gas. Greater deviations in $H_2/CO$ ratio and residual $CO_2$ content of the feed gas will cause serious problems regarding SNG specification. The conclusion is only reasonable when there are no high requirements for SNG specification.

## Higher-Hydrocarbon Content

Coal pressure gasification gas, after purification in a Rectisol unit, will contain higher hydrocarbons in the $C_2$-$C_3$ range of 0.2 to 0.6 Vol%. The results of an analytical examination during all test runs showed that the used nickel catalyst has a good gasification or hydrogenation activity. Unsaturated hydrocarbons such as ethylene and propylene are hydrogenated completely while the saturated hydrocarbons such as ethane and propane are converted to methane up to equilibrium concentrations of 50 ppm ethane and $<5$ ppm propane.

## Catalyst Poisons

It is well known that sulfur, chlorine etc. are strong poisons for nickel catalyst. Chlorine was not detectable in synthesis gas downstream Rectisol in the Sasol plant. The total sulfur content in the same gas, in form of $H_2S$, COS and organic sulfur components, has been 0.08 mg/Nm$^3$ on the average with maximum values of 0.12 mg/Nm$^3$ total sulfur at average $H_2S$ content of 0.03 mg/Nm$^3$.

The effect of sulfur contamination on catalyst activity was examined in an extra test run in the Sasol plant. The results can be seen from Fig. 3, where conversion in 6.3% and 23.8% of the total catalyst bed as an indirect criterion of catalyst activity is plotted versus operating time.

In the first operating period (750 - 950 h) the plant was run with the ZnO emergency catchpot on line. Sulfur could be decreased to 0.04 mg/Nm$^3$ total sulfur and 0.02 mg/Nm$^3$ $H_2S$. The conversion in the first 6.3% of the catalyst bed decreased from 50% to 46% while no change in conversion was detectable in the first 23.8% of the bed.

No change in deactivation was measured when in the second operating period (950 - 1230 h) ZnO reactor D-1 was by-passed. The conversion in the first 6.3% of the catalyst bed came down from 46% to 42%.

In the third operating period (1230 - 1380 h) a breakthrough of 4 mg/Nm$^3$ $H_2S$ in synthesis gas was simulated, causing an enormous activity loss. The point of reaching adiabatic end temperature in the catalyst bed went down from 22% to 44% bed depth, while the conversion in the first 23.8% of the bed came down from 100% to 78%. Operating 150 hours with 4 mg/Nm$^3$ $H_2S$ corresponds to one year operation with 0.08 mg/Nm$^3$ total sulfur in the feed gas to methanation.

These tests permit the simplified conclusion that synthesis gas purified in a Rectisol unit can be charged directly to the methanation plant without severe problems concerning sulfur poisoning of the nickel catalyst. But to cope with a sudden sulfur breakthrough from Rectisol as a result of maloperation a commercial methanation plant should be operated with a ZnO emergency catchpot on line.

## INFLUENCE OF TEMPERATURE AND PRESSURE

The selection of optimal reactor inlet and outlet temperature is influenced by the catalyst activity and catalyst stability and by the need to minimize operating and investment costs.

Using a catalyst like G 1-85 of BASF inlet temperatures in the range of 260°C to 300°C or even lower will be quite acceptable as indicated by the test reported in Tab. 2. The final decision on design inlet temperature is effected by engineering requirements.

The long-term tests in the Sasol plant as well as in the Schwechat plant have been operated with outlet temperatures of 450°C. But both plants also have been operated with higher load causing reactor outlet temperatures of 470°C or even higher. In compaison with the test run at 450°C there was no increase in deactivation rate detectable, which demonstrates the thermostability of the catalyst. From the viewpoint of thermostability outlet temperatures in the range of 450°C - 500°C are acceptable. Further consideration concerning possibility of overload operation, SNG specification to be achieved in final methanation, end of run conditions, cost of reactor material, etc. will affect the selection of optimal outlet temperature.

The influence of total pressure is limited. For reasons of SNG specification a relatively high pressure is preferred but compression of synthesis gas compared with final SNG compression turned out to be uneconomical. The pressure in methanation is governed by the pressure of gasification and the pressure drop across upstream plants.

## INFLUENCE OF STEAM

Apart from actual synthesis tests extensive investigations were made on fresh and used catalyst to determine the effect of steam on catalyst activity and catalyst stability by measurement of surface areas. While the BET area 4) is a measure of the total surface area, the volume of chemisorbed hydrogen is a measure of the amount of exposed metallic nickel area only and therefore should bea truer measure of the catalytically active area.

The test results of $H_2$ chemisorption measurement are summerized in Tab. 3. For the fresh reduced G 1-85 an activity equivalent to 11.2 ml/gr was determined. When this reduced catalyst ist treated with a mixture of hydrogen and steam , it looses 27% of its activity. This activity loss is definitely caused by steam as a catalyst treated 4000 hours in final methanation with a nearly dry gas showed no activity loss. In the first 1000 operating hours the catalyst looses again 33% of its activity in the top section and 16% in the bottom section of the reactor. This should be called loss of start activity. In the next 3000 operating hours the activity loss has been extremely low. Catalyst has achieved its stabilized standard activity.

The activity loss measured here is caused by recrystallisations as proved by nickel crystallite size determination on the same catalyst samples by scanning electron microscopy.

These tests have shown that the catalyst used in demonstration plants has only little tendency to recrystallise or sinter after steam formation and loss of start activity.

## CONCLUSION

These tests have been performed to establish the limits in flexibility and operability of a methanation scheme. The two demonstration plants have been operated to find optimal design parameters as well as the possible variation range which can be handled without affecting catalyst life and SNG specification. Using a hot recycle methanation system the requirement for synthesis gas concerning $H_2/CO$ ratio, $CO_2$ content, higher hydrocarbon content are not fixed to a small range, only the content of poisons should be kept to a minimum. The catalyst has proved its chemostability and resistance against high steam contents, resulting into an expected life of more than 16 000 hours.

## Literature:

| | | |
|---|---|---|
| (1) | Rudolph, P. F. | "The Lurgi Route to Substitute Natural Gas from Coal", 4th Synthetic Pipeline Gas Symposium, Chicago, Oct. 1972 |
| (2) | Roger, A. | "Supplementing the Natural Gas Supply " Presented to South Texas Section Meeting, American Society of Mechanical Engineers, Houston, April 1973 |
| (3) | Moeller, F.W.,<br>Roberts, H. and<br>Britz, B. | "Methanation of Coal Gas for SNG" Hydrocarbon Processing, 53, 4, 69, 1974 |
| (4) | Wallas, S. M. | "Reaction Kinetics for Chemical Engineers" McGraw Hill NYC, 1959 p. 153 |

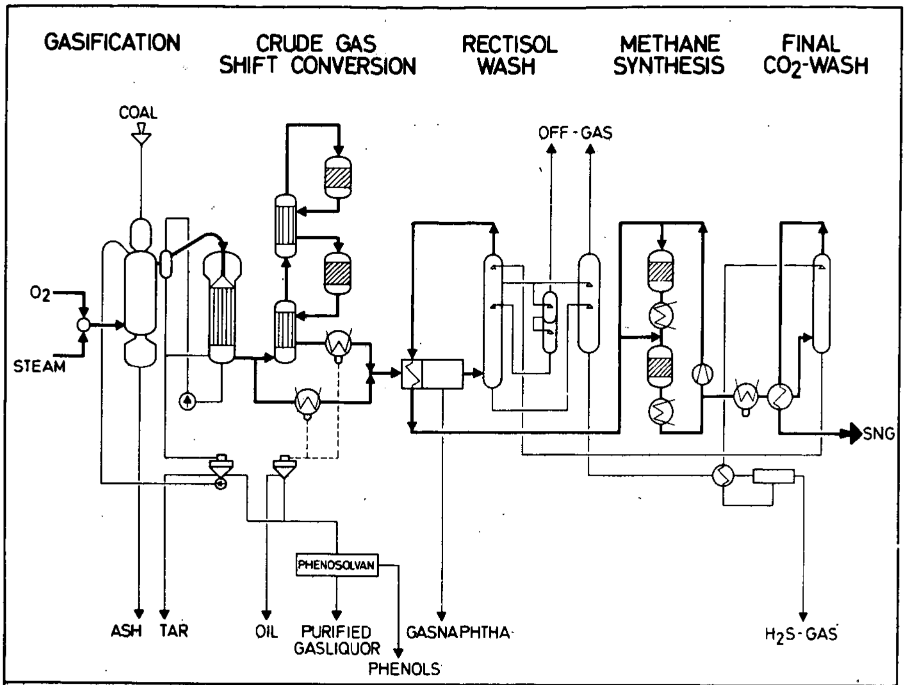
GASIFICATION
CRUDE GAS SHIFT CONVERSION
RECTISOL WASH
METHANE SYNTHESIS
FINAL $CO_2$-WASH
COAL
OFF-GAS
$O_2$
STEAM
SNG
PHENOSOLVAN
ASH
TAR
OIL
PURIFIED GASLIQUOR
PHENOLS
GASNAPHTHA
$H_2S$-GAS

FIG. 1 LURGI PROCESS TO PRODUCE S.N.G. FROM COAL

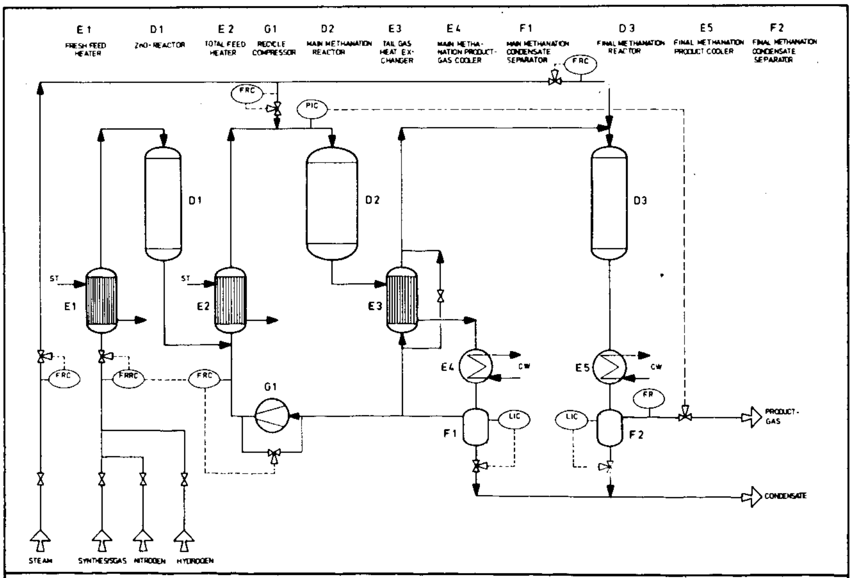
E1 FRESH FEED HEATER
D1 ZnO-REACTOR
E2 TOTAL FEED HEATER
G1 RECYCLE COMPRESSOR
D2 MAIN METHANATION REACTOR
E3 TAIL GAS HEAT EX-CHANGER
E4 MAIN METHA-NATION PRODUCT-GAS COOLER
F1 MAIN METHANATION CONDENSATE SEPARATOR
D3 FINAL METHANATION REACTOR
E5 FINAL METHANATION PRODUCT COOLER
F2 FINAL METHANATION CONDENSATE SEPARATOR
FRC
PIC
FRC
D1
D2
D3
ST
E1
ST
E2
E3
E4
CW
E5
CW
FRC
FRRC
FRC
G1
FR
LIC
LIC
F1
F2
PRODUCT-GAS
CONDENSATE
STEAM
SYNTHESISGAS
NITROGEN
HYDROGEN

FIG. 2 Methanation Pilot Plant

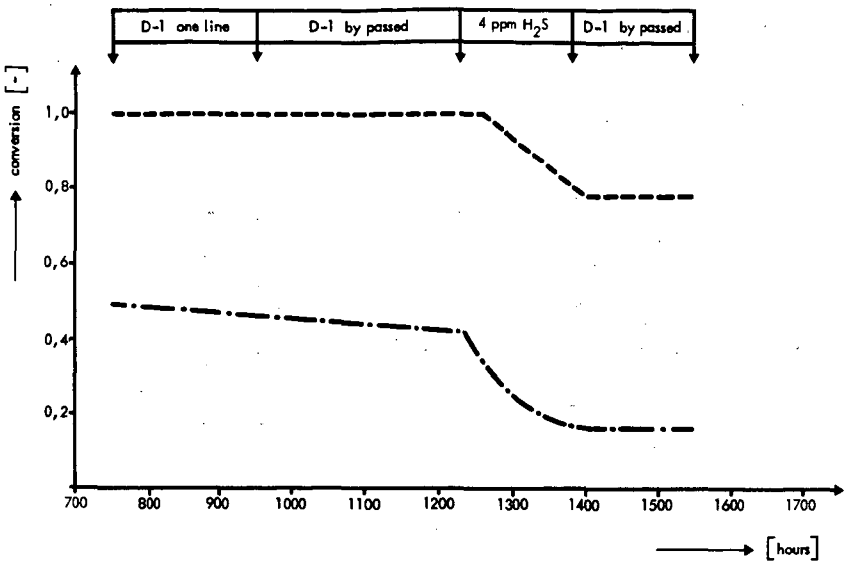

Fig. 3 Effect of S-Poisoning

Table 1

| | $H_2/CO = 5.8$ | | | $H_2/CO = 3.7$ | | | $H_2/CO = 2.0$ | | |
|---|---|---|---|---|---|---|---|---|---|
| | Syngas | Feed to D-2 | Effluent gas D-2 | Syngas | Feed to D-2 | Effluent gas D-2 | Syngas | Feed to D-2 | Effluent gas D-2 |
| Pressure ($kg/cm^2$) | | 18.0 | | | 18.0 | | | 18.0 | |
| Temperature (°C) | 270 | 300 | 450 | 270 | 300 | 450 | 270 | 300 | 450 |
| Gascomposition | | | | | | | | | |
| $CO_2$ Vol% | 16.6 | 20.5 | 22.1 | 9.4 | 15.4 | 17.2 | 0.8 | 14.6 | 19.0 |
| CO " | 10.7 | 3.4 | 0.4 | 16.6 | 4.1 | 0,4 | 28.6 | 7.2 | 0,4 |
| $H_2$ " | 62.0 | 23.9 | 8.7 | 62.0 | 20.6 | 8.4 | 56.6 | 22.7 | 12.0 |
| $CH_4$ " | 9.8 | 50.7 | 67.0 | 10.8 | 57.7 | 71.6 | 12.3 | 52.8 | 65.5 |
| $C_2$+ " | 0.2 | 0.1 | <0.1 | 0.2 | 0.1 | <0.1 | 0.2 | 0.1 | <0.1 |
| $N_2$ " | 0.7 | 1.4 | 1.7 | 1.0 | 2.1 | 2.4 | 1.5 | 2.6 | 3.0 |
| $H_2O$ $Nm^3/Nm^3$ | - | 0.417 | 0.584 | - | 0.387 | 0.501 | - | 0.722 | 0.852 |
| Total conversion | | | | | | | | | |
| $U_{CO_2}$ % | 48.3 | | | 23.7 | | | -1076.3 | | |
| $U_{CO}$ % | 98.4 | | | 99.0 | | | 99.3 | | |
| $U_{H_2}$ % | 94.1 | | | 94.3 | | | 89.5 | | |
| Bed depth needed for total conversion % | | | | | | | | | |
| 500 hrs | 20 | | | 20 | | | 23 | | |
| 1000 hrs | 22 | | | 22 | | | 25 | | |

Table 2

| | Sasol plant | | | | | Schwechat plant | | | | |
|---|---|---|---|---|---|---|---|---|---|---|
| | Main methanation | | | Final methanation | | Main methanation | | | Final methanation | |
| | Syngas | Feed D 2 | Effluent gas D 2 | Feed D 3 | Effluent gas D 3 | Syngas | Feed D 2 | Effluent gas D 2 | Feed D 3 | Effluent gas D 3 |
| Pressure ($kp/cm^2$) | - | 18.0 | - | - | - | - | 16.3 | - | - | - |
| Temperature (°C) | 270 | 300 | 450 | 260 | 315 | - | 290 | 440 | 283 | 345 |
| Gascomposition | | | | | | | | | | |
| $CO_2$ Vol% | 13.0 | 19.3 | 21.5 | 21.5 | 21.3 | 5.1 | 4.4 | 4.1 | 4.1 | 1.8 |
| CO Vol% | 15.5 | 4.3 | 0.4 | 0.4 | <0.1 | 14.4 | 4.0 | 0.1 | 0.1 | <0.1 |
| $H_2$ Vol% | 60.1 | 41.3 | 7.7 | 7.7 | 0.7 | 61.6 | 25.7 | 12.1 | 12.1 | 2.2 |
| $CH_4$ Vol% | 10.3 | 53.3 | 68.4 | 68.4 | 75.9 | 18.9 | 65.9 | 83.7 | 83.7 | 96.0 |
| $C_2$+ Vol% | 0.2 | 0.1 | <0.1 | <0.1 | <0.1 | - | - | - | - | |
| $N_2$ Vol% | 0.9 | 1.7 | 2.0 | 2.0 | 2.0 | - | - | - | - | |
| $H_2O$ ($Nm^3/Nm^3$) | - | 0.37 | 0.50 | 0.04 | 0.08 | - | 0.349 | 0.481 | 0.061 | 0.123 |
| Total Conversion | | | | | | | | | | |
| $U_{CO_2}$ (%) | | | 33.4 | | | | | | 86.1 | |
| $U_{CO}$ (%) | | | 99.9 | | | | | | 99.9 | |
| $U_{H_2}$ (%) | | | 99.5 | | | | | | 98.6 | |

**Table 3:**

| | $H_2$-Adsorption (ml/gr) |
|---|---|
| Fresh reduced catalyst G 1-85 | 11.2 |
| $H_2/H_2O$-Treatment | 8.0 |
| Used catalyst out of main methanation | |
| 1000 hrs | 4.4 (top bed)<br>6.4 (bottom bed) |
| 4000 hrs | 4.0 (top bed)<br>6.2 (bottom bed) |
| Used catalyst out of final methanation | |
| 4000 hrs | 11.0 (middle bed) |